KISO | High rectangular

Tomoya Tabuchi | 2026



KISO

Tomoya Tabuchi | 2026

A versatile, intuitive system that brings together structural clarity, functionality and technology in a refined, minimalist design: KISO, the new family of folding tables designed by Tomoya Tabuchi, responds naturally to the evolution of the contemporary office, increasingly called upon to accommodate different people, activities and configurations throughout the day.

The name, meaning “base” or “foundation” in Japanese, expresses the principle at the heart of the design. A metal tube connects the legs and forms the structural core of the entire collection. Tabuchi assigns it several functions: it supports the tabletop, houses the mechanism that allows it to rotate and integrates the power supply, with a Schuko socket on one side and USB-A and USBC ports on the other. From a single foundation, simple in form, multiple possibilities can develop in terms of function, shape and space. With one simple movement, the tabletop rotates from horizontal to vertical, reducing its footprint and making the tables easier to move, align and reconfigure.



KISO

Tomoya Tabuchi | 2026

| High rectangular Rectangular table H105

Flip-top, nestable rectangular tables with powder-coated steel frame. Available with castors, integrated power access, or both. Top available in a range of finishes. Optional tabletop linking system available.

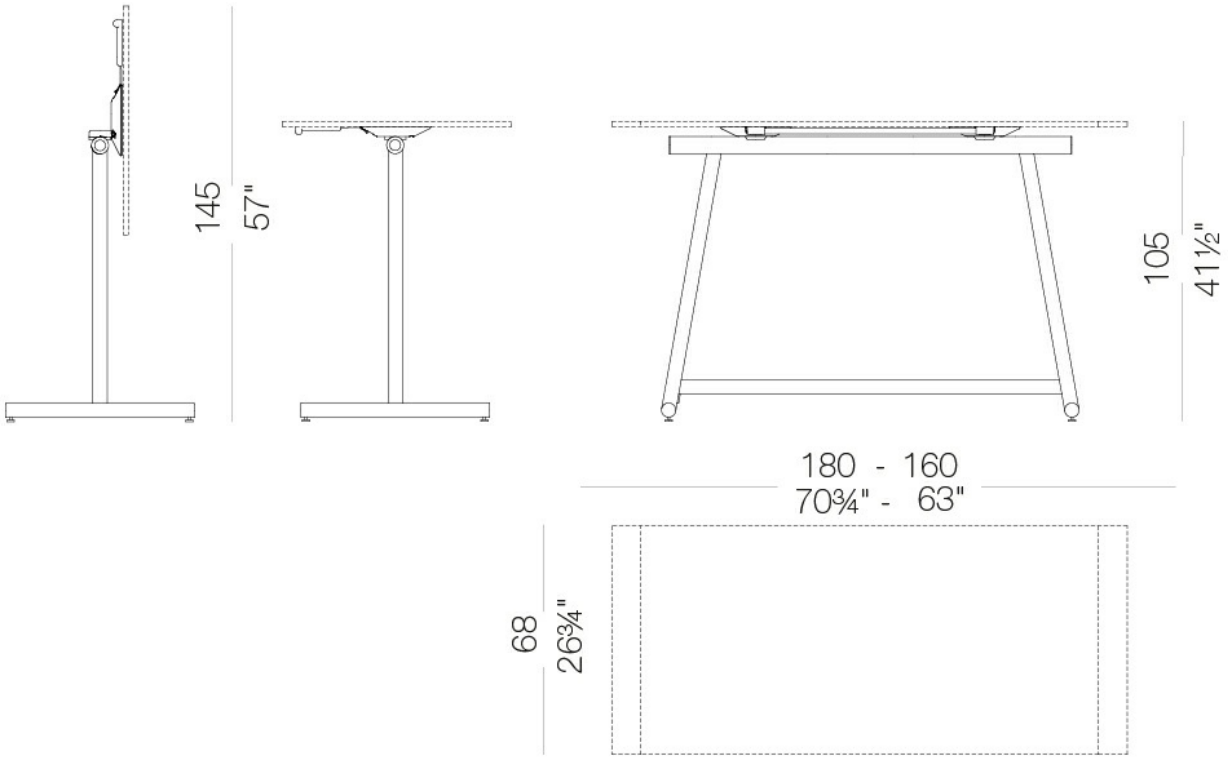

KISO | High rectangular

Tomoya Tabuchi | 2026

frame



metal
powder coating
16 Colors

top



wood
blanched oak
1 Colors



wood
lacquered open pore
16 Colors



wood
lacquered
16 Colors



HPL 10 mm
HPL black core
2 Colors



HPL 10 mm
HPL fenix
9 Colors



laminate
fenix 7/10
9 Colors

KISO | High rectangular

Tomoya Tabuchi | 2026

consult the porfolio for the range of colors, fabrics, eco-leather, soft-leather.

use and maintenance instructions
Clean all parts in wood, leather, fabric and metal with a damp cloth or a diluted neutral cleaner. Do not use cleaners with alcohol, bleach, solvent or abrasive products. Any liquid spilt on the product must be wiped up immediately.When lifting or moving the product, hold it on the structure and not under the seat. The product should not be subjected to unbalanced weights, as it is designed for a proper rest on the foothold (on four legs or on the base). Our company relieves from any responsibility in case of damage caused to fragile floors. Avoid any improper use of the product: do not step on the product, on the footrest or on the armrests. Avoid any movements that could compromise the proper functionality of the product or the safety of the users.Wood and leather, being natural materials, could be easily damaged. Small impurities or imperfections are within quality standard range.Do not expose the product to weather conditions or atmospheric agents, nor to heat sources over 40°C. Also products for outdoor use could be afflicted by atmospheric agents. The product could undergo possible exterior changes due to particular exposure to heat, humidity and saltiness. An appropriate and frequent maintenance and cleaning of the product enhances its durability. The product could change colour and shade, if exposed to direct sunlight. Maintenance has to be carried out by experienced staff. Dispose of the package only after assembling the product, in order to avoid the loss of ironmongery and components. Once the product has been dismantled, the product itself or its components must be given to the public garbage disposal system, according to the legislation in force.